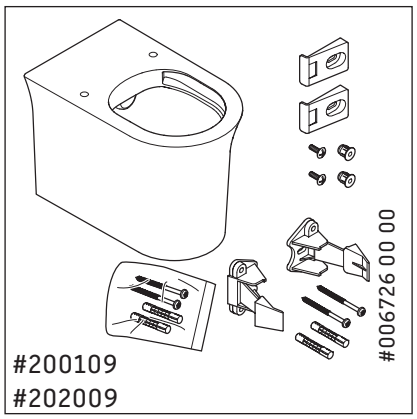
#006726 00 00
#200109
#202009

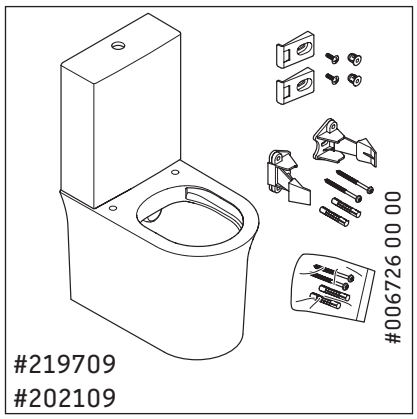
#006726 00 00
#219709
#202109

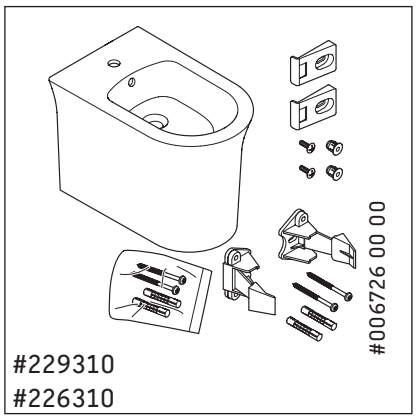
#006726 00 00
#229310
#226310

1

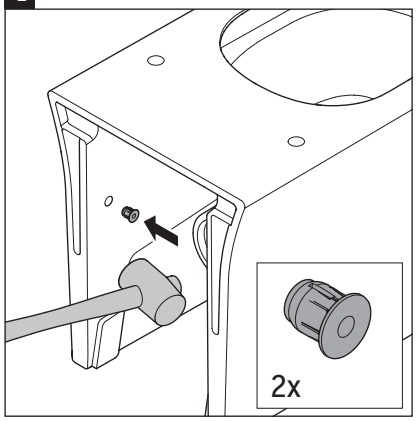
2x

2

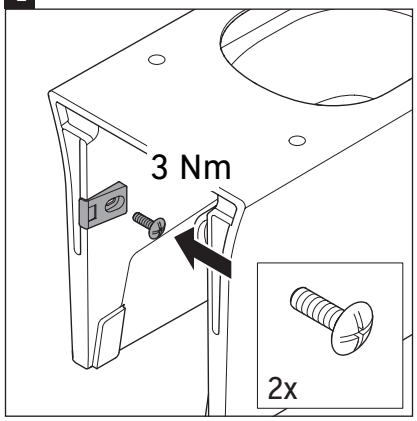
3 Nm
2x

3

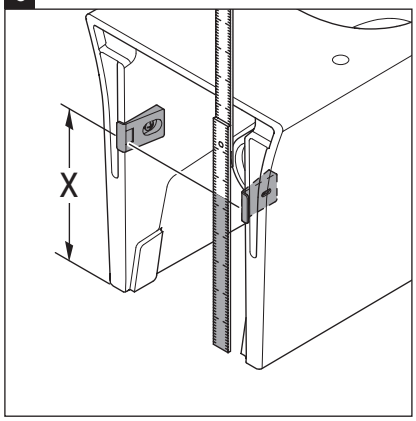
X

4

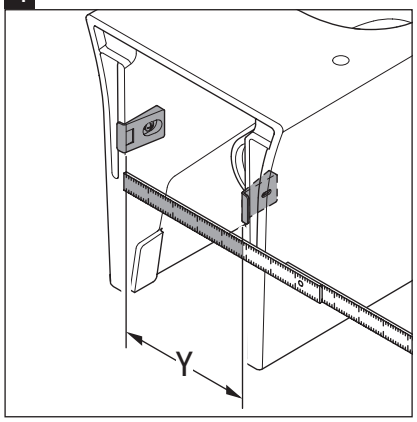
Y

5

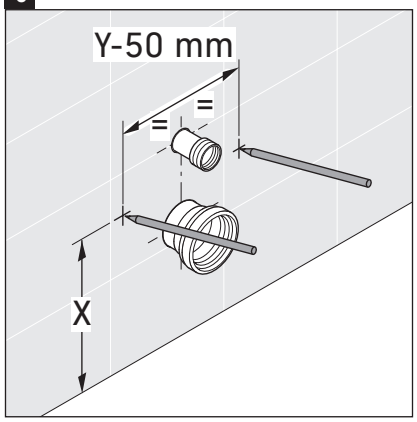
Y-50 mm
=
=
X

6

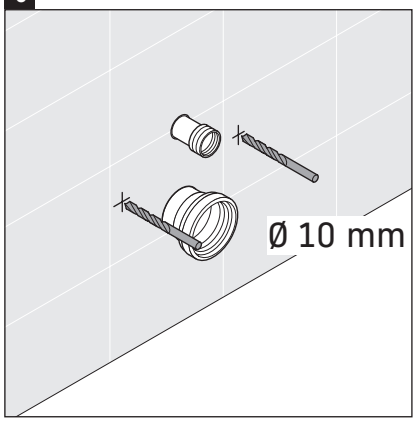
Ø 10 mm

7

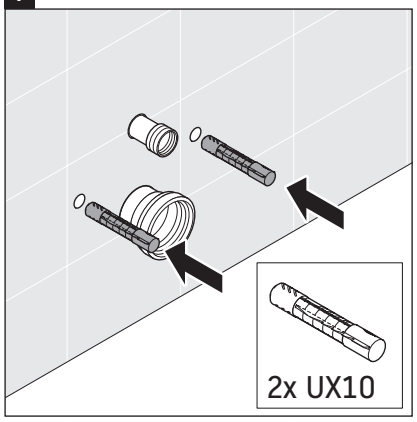
2x UX10

8

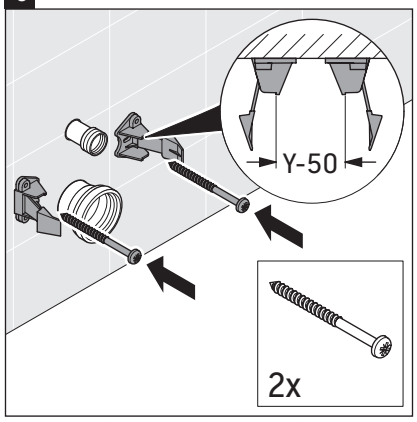
Y-50
2x

9

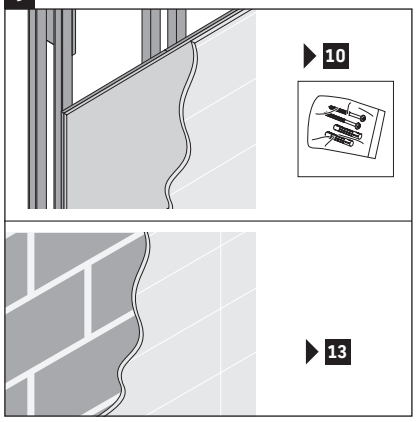
10
13

10

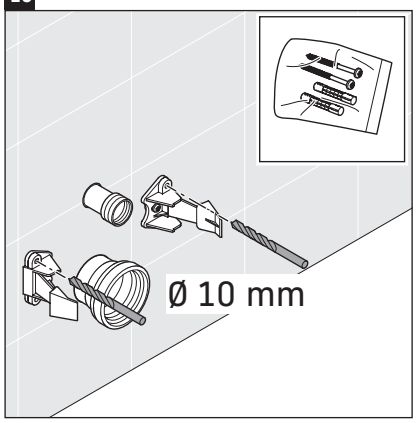

11

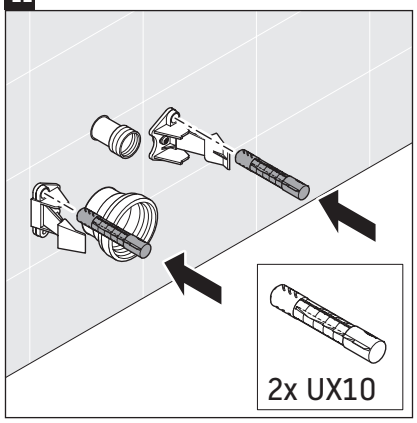

12

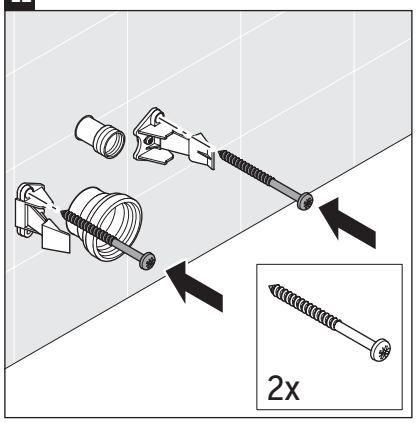

13

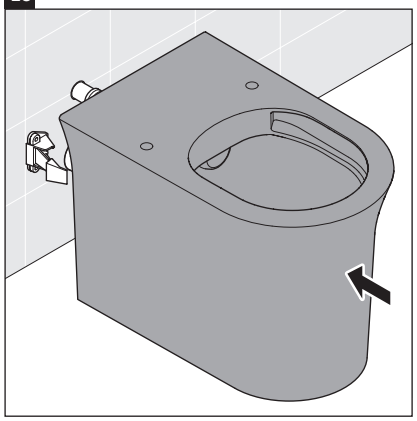

14

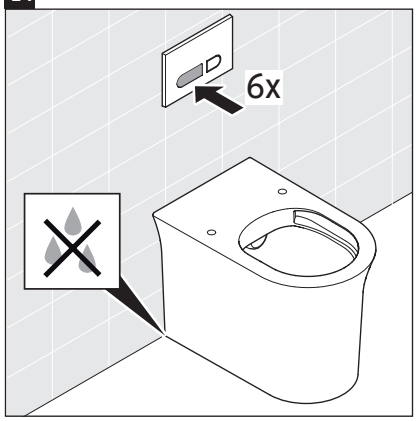

15

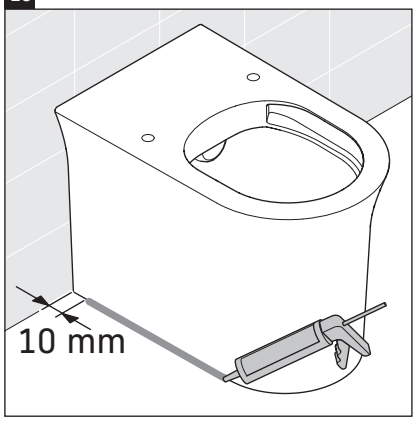

16 #219709 .. ..

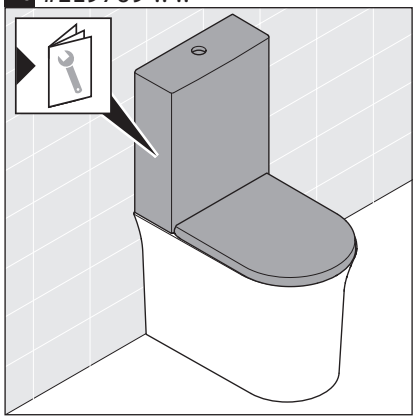

17 #200109 .. ..

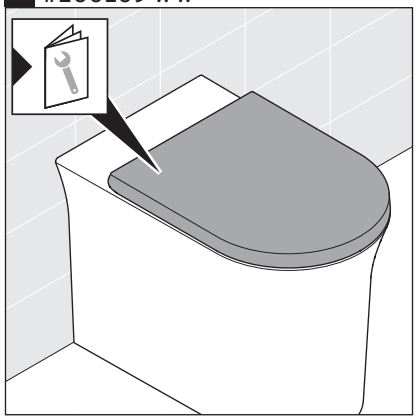

57392
Best.-Nr. 7030052_23.01.2 We reserve the right to make technical improvements and design modifications to the products illustrated.